V_{RRM} =	4500 V
$I_{F(AV)M}$ =	2620 A
I_{FSM} =	$56 \cdot 10^3$ A
V_{F0} =	1.10 V
r_F =	0.47 mΩ
$V_{DC\text{-}Link}$ =	2800 V

Fast Recovery Diode

5SDF 28L4520

Doc. No. 5SYA1185-03 Jan. 17

- **Industry standard housing**
- **Cosmic radiation withstand rating**
- **Optimized low on-state**
- **Optimized for snubberless operation**
- **High RBSOA upto high di/dt**

Blocking

Maximum rated values [1)]

Parameter	Symbol	Conditions		5SDF 28L4520	Unit
Repetitive peak reverse voltage	V_{RRM}	f = 50 Hz, t_p = 10 ms, T_{vj} = 140 °C		4500	V
Permanent DC voltage for 100 FIT failure rate	$V_{DC\text{-}link}$	Ambient cosmic radiation at sea level in open air.	100% Duty	2800	V
			5% Duty	3200	

Characteristic values

Parameter	Symbol	Conditions	min	typ	max	Unit
Reverse leakage current	I_{RRM}	V_{RRM}, T_{vj} = 140 °C			120	mA

Mechanical data

Maximum rated values [1)]

Parameter	Symbol	Conditions	min	typ	max	Unit
Mounting force	F_M		36	40	70	kN
Acceleration	a	Device unclamped			50	m/s^2
Acceleration	a	Device clamped			200	m/s^2

Characteristic values

Parameter	Symbol	Conditions	min	typ	max	Unit
Weight	m				1.45	kg
Housing thickness	H	F_M = 40 kN, T_a = 25 °C	25.4		25.8	mm
Surface creepage distance	D_S		33			mm
Air strike distance	D_a		14			mm

1) Maximum rated values indicate limits beyond which damage to the device may occur

No.21,7th alley, Nilofar.
St ,Khorramshahe Ave
1533877411,Tehran-IRAN

www.shairad-sanat.com
Email: info@shairad-sanat

Tel: + 98 21 88505119
fax: + 98 21 88505102

On-state

Maximum rated values [1)]

Parameter	Symbol	Conditions	min	typ	max	Unit
Average on-state current	$I_{F(AV)M}$	Half sine wave, Tc = 70 °C			2620	A
RMS on-state current	$I_{F(RMS)}$				4120	A
Peak non-repetitive surge current	I_{FSM}	t_p = 10 ms, T_{vj} = 140 °C, sine half wave, V_R = 0 V, after surge			$56 \cdot 10^3$	A
Limiting load integral	I^2t				$15.7 \cdot 10^6$	A^2s

Characteristic values

Parameter	Symbol	Conditions	min	typ	max	Unit
On-state voltage	V_F	I_F = 3300 A, T_{vj} = 140 °C		2.3	2.6	V
Threshold voltage	V_{F0}	500...4000, T_{vj} = 140 °C			1.10	V
Slope resistance	r_F				0.47	m□

Turn-on

Characteristic values

Parameter	Symbol	Conditions	min	typ	max	Unit
Peak forward recovery voltage	V_{FRM}	dI_F/dt = 3000 A/µs, I_{FM} = 5500 A, T_{vj} = 140 °C		190		V

Turn-off

Maximum rated values [1)]

Parameter	Symbol	Conditions	min	typ	max	Unit
Max. decay rate of on-state current	di/dt_{crit}	I_{FM} = 5500 A, T_{vj} = 140 °C, $V_{DC\text{-}Link}$ = 2800 V			1000	A/µs

Characteristic values

Parameter	Symbol	Conditions	min	typ	max	Unit
Reverse recovery charge	Q_{rr}	I_{FQ} = 3300 A, $V_{DC\text{-}Link}$ = 2800 V, $-di_F/dt$ = 1000 A/µs, L_{CL} = 300 nH, C_{CL} = 20 µF, R_{CL} = 0.3 □, D_{CL} = 5SDF 10H4503, T_{vj} = 140 °C		10000	10900	µAs
Reverse recovery current	I_{RM}			2500	2800	A
Turn-off energy	E_{rr}			23	27.44	J

Thermal

Maximum rated values [1)]

Parameter	Symbol	Conditions	min	typ	max	Unit
Operating junction temperature range	T_{vj}		0		140	°C
Storage temperature range	T_{stg}		-40		125	°C

No.21,7th alley, Nilofar.
St ,Khorramshahe Ave
1533877411,Tehran-IRAN

www.shairad-sanat.com
Email: info@shairad-sanat

Tel: + 98 21 88505119
fax: + 98 21 88505102

Parameter	Symbol	Conditions	min	typ	max	Unit
Thermal resistance junction to case	$R_{th(j-c)}$	Double-side cooled F_m = 36... 70 kN			6	K/kW
	$R_{th(j-c)A}$	Anode-side cooled F_m = 36... 70 kN			11.2	K/kW
	$R_{th(j-c)C}$	Cathode-side cooled F_m = 36... 70 kN			12.9	K/kW
Thermal resistance case to heatsink	$R_{th(c-h)}$	Double-side cooled F_m = 36... 70 kN			3	K/kW
	$R_{th(c-h)}$	Single-side cooled F_m = 36... 70 kN			6	K/kW

Characteristic values

Analytical function for transient thermal impedance:

$$Z_{th(j-c)}(t) = \sum_{i=1}^{n} R_i (1-e^{-t/\tau_i})$$

i	1	2	3	4
R_i(K/kW)	3.708	1.426	0.686	0.176
τ_i(s)	0.5336	0.0670	0.0074	0.0011

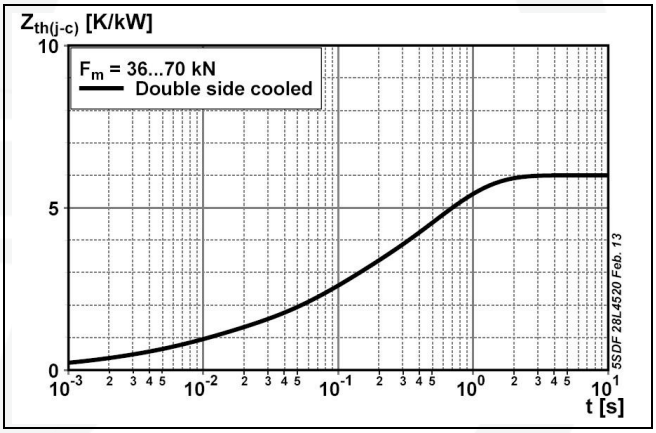

Fig. 1 Transient thermal impedance (junction-to-case) vs. time

Max. on-state characteristic model:

$$V_{F25} = A_{Tvj} + B_{Tvj} \cdot I_F + C_{Tvj} \cdot \ln(I_F + 1) + D_{Tvj} \cdot \sqrt{I_F}$$

Valid for I_F = 200 - 48000 A

A_{25}	B_{25}	C_{25}	D_{25}
$364.10 \cdot 10^{-3}$	$235.80 \cdot 10^{-6}$	$116.1 \cdot 10^{-3}$	$7.92 \cdot 10^{-3}$

Max. on-state characteristic model:

$$V_{F140} = A_{Tvj} + B_{Tvj} \cdot I_F + C_{Tvj} \cdot \ln(I_F + 1) + D_{Tvj} \cdot \sqrt{I_F}$$

Valid for I_F = 200 - 48000 A

A_{140}	B_{140}	C_{140}	D_{140}
$40.96 \cdot 10^{-3}$	$220.50 \cdot 10^{-6}$	$125.10 \cdot 10^{-3}$	$14.23 \cdot 10^{-3}$

No.21,7th alley, Nilofar.
St ,Khorramshahe Ave
1533877411,Tehran-IRAN
www.shairad-sanat.com
Email: info@shairad-sanat
Tel: + 98 21 88505119
fax: + 98 21 88505102

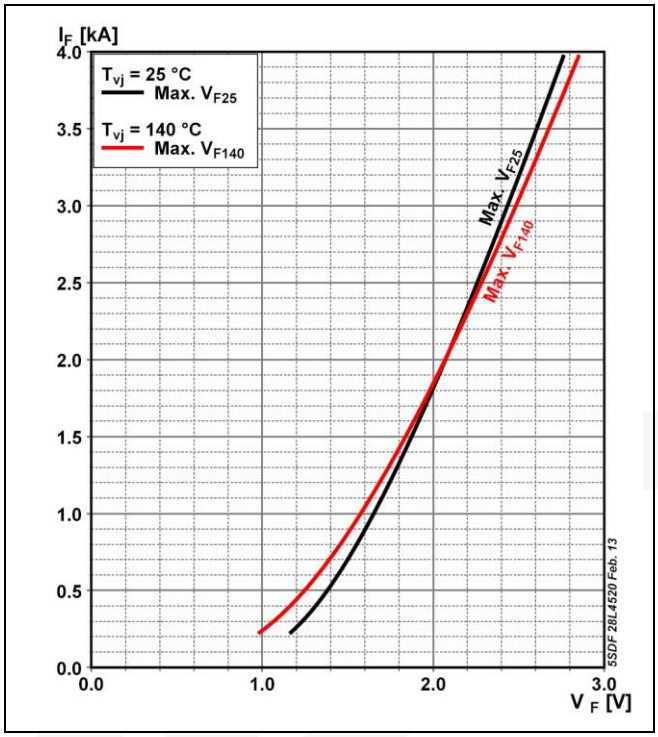

Fig. 2 On-state voltage characteristics

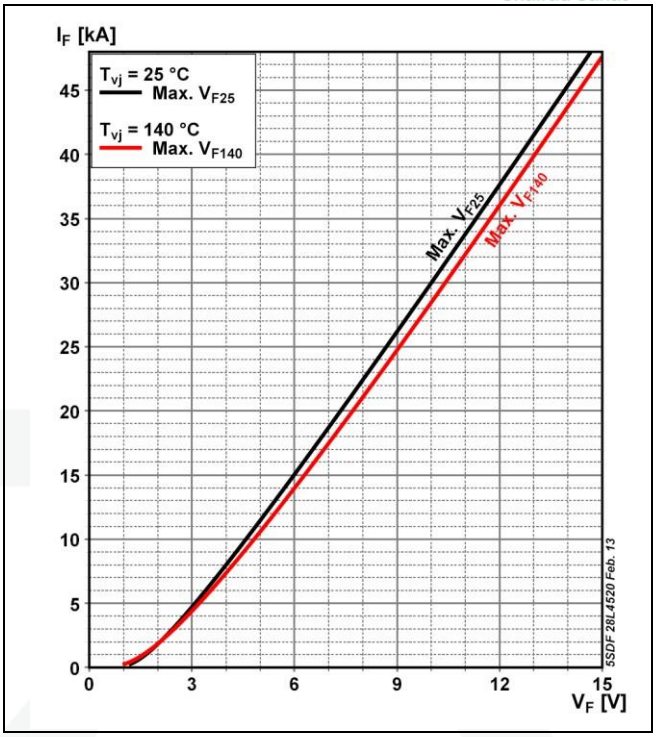

Fig. 3 On-state voltage characteristics

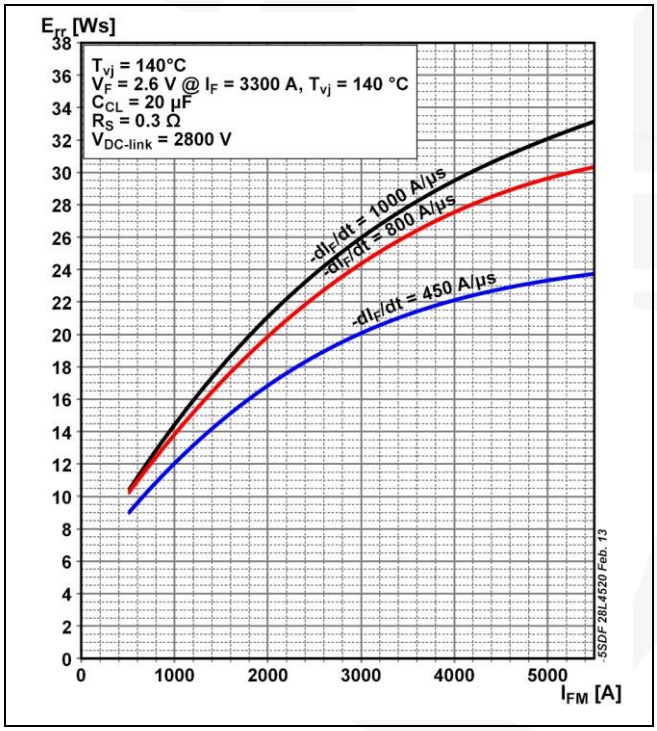

Fig. 4 Upper scatter range of turn-off energy per pulse vs. turn-off current

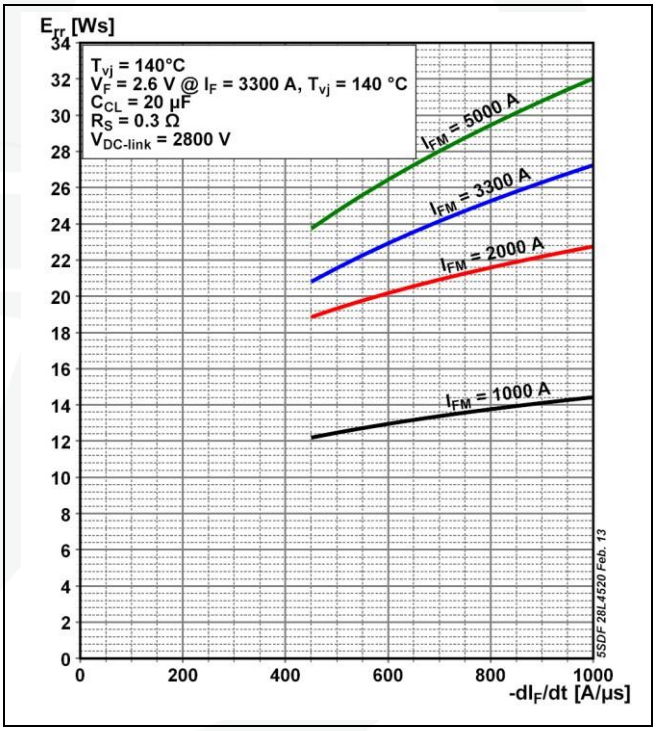

Fig. 5 Upper scatter range of turn-off energy per pulse vs reverse current rise rate

No.21,7th alley, Nilofar.
St ,Khorramshahe Ave
1533877411,Tehran-IRAN

www.shairad-sanat.com
Email: info@shairad-sanat

Tel: + 98 21 88505119
fax: + 98 21 88505102

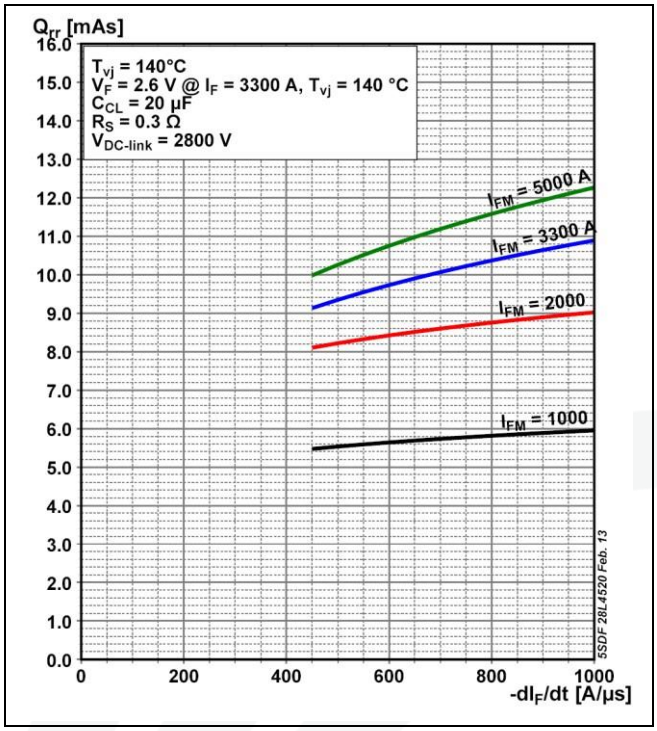

Fig. 6 Upper scatter range of repetitive reverse recovery charge vs reverse current rise rate.

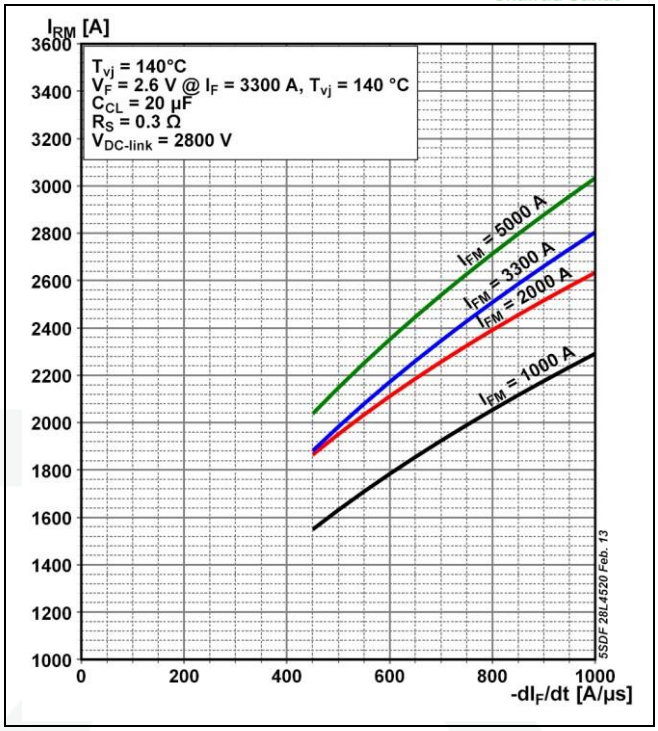

Fig. 7 Upper scatter range of reverse recovery current vs reverse current rise rate

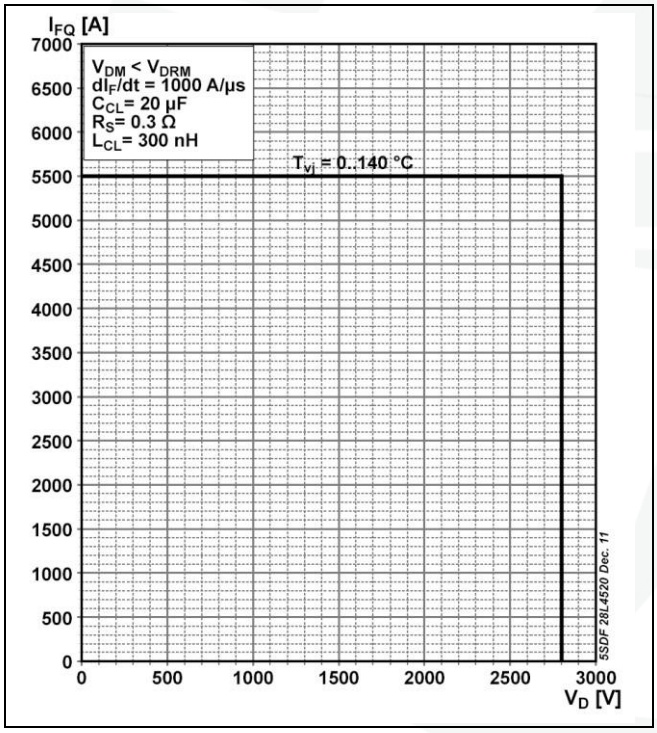

Fig. 8 Diode Safe Operating Area

No.21,7th alley, Nilofar.
St ,Khorramshahe Ave
1533877411,Tehran-IRAN
www.shairad-sanat.com
Email: info@shairad-sanat
Tel: + 98 21 88505119
fax: + 98 21 88505102

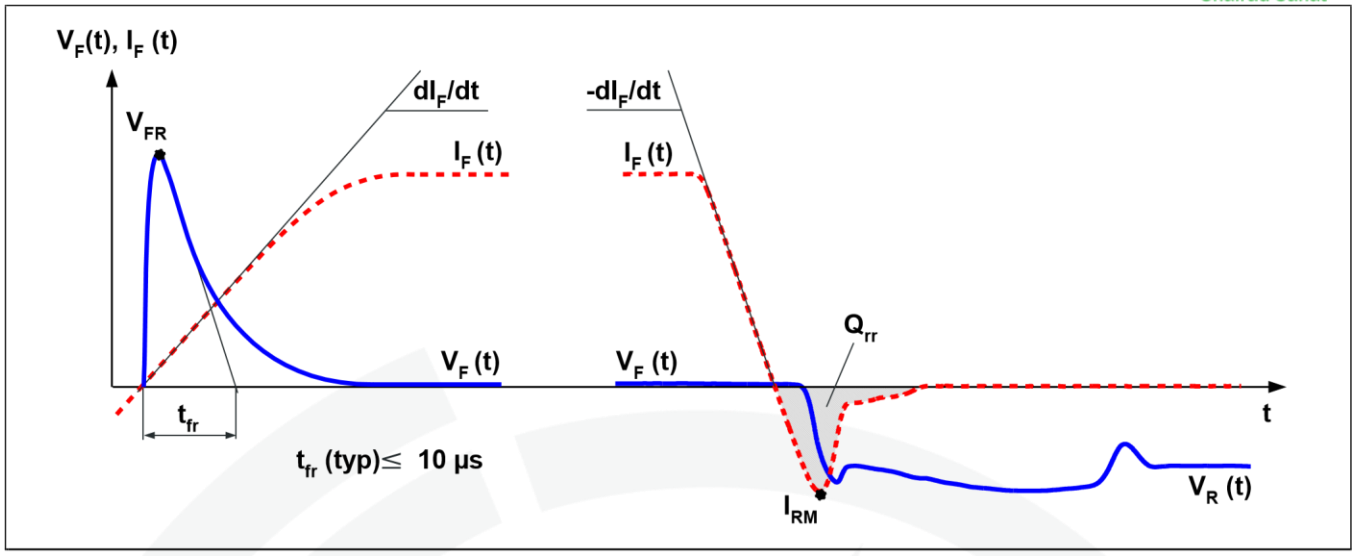

Fig. 9 General current and voltage waveforms

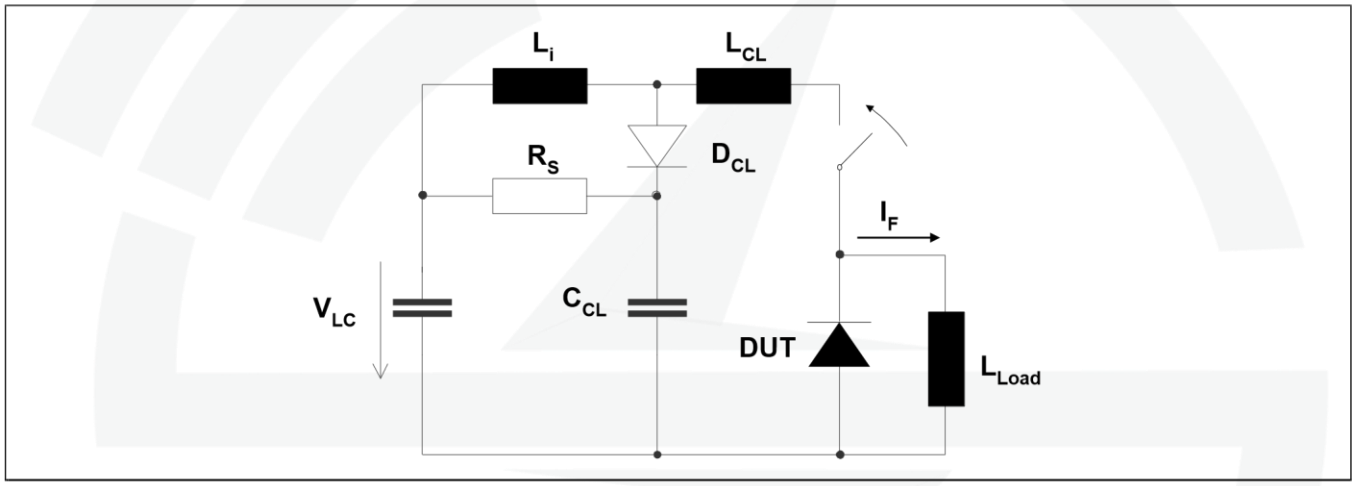

Fig. 10 Test circuit.

No.21,7th alley, Nilofar.
St ,Khorramshahe Ave
1533877411,Tehran-IRAN
www.shairad-sanat.com
Email: info@shairad-sanat
Tel: + 98 21 88505119
fax: + 98 21 88505102

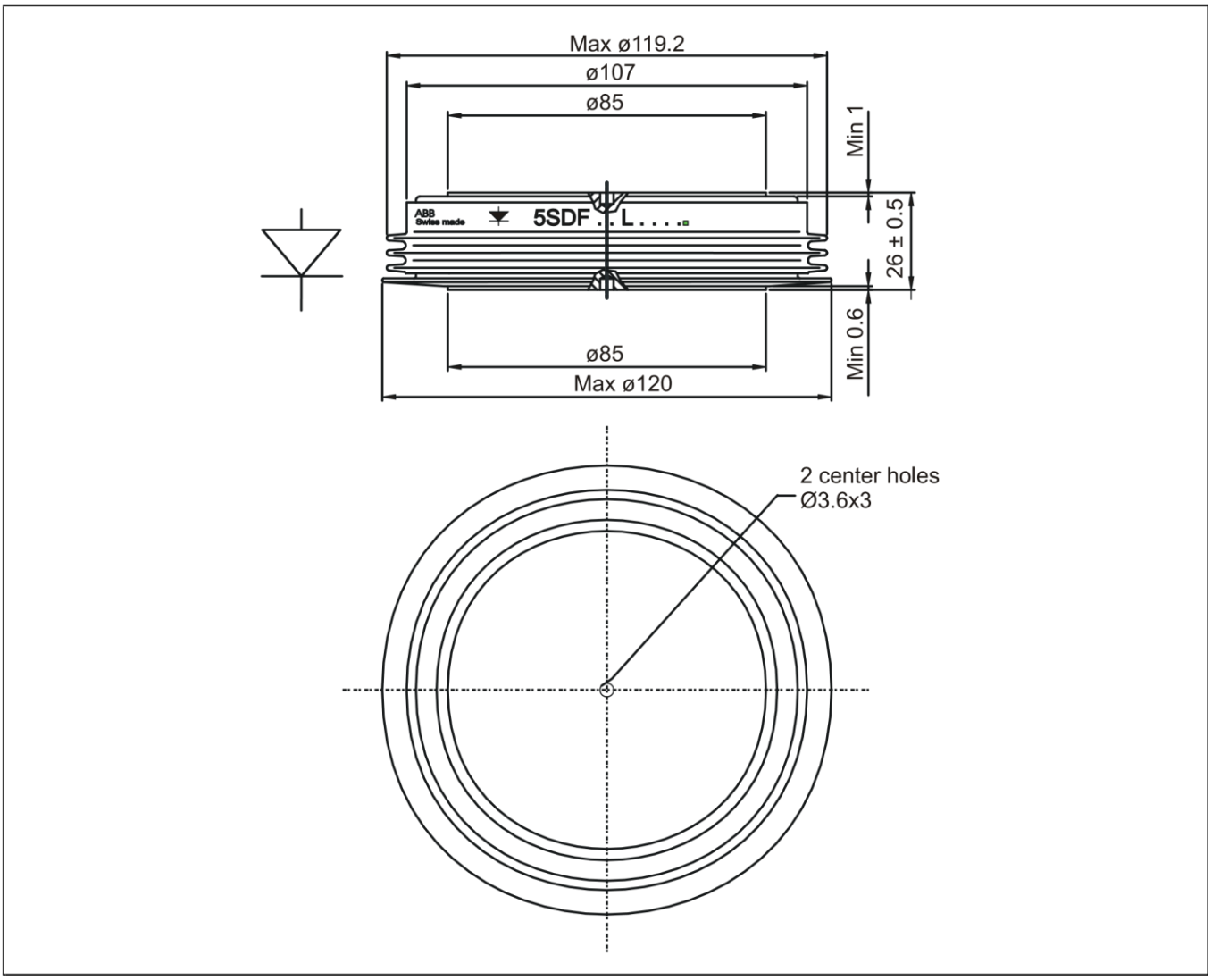

Fig. 11 Device Outline Drawing