Product data sheet
Miniature connectors

Product description	**M16 IP40 Female panel mount connector, Contacts: 8 DIN, unshielded, THT, IP40, front mounting**
Area	**M16 IP40 series 680**
Part no.	**09 0474 65 08**

Illustration

Flexplatte

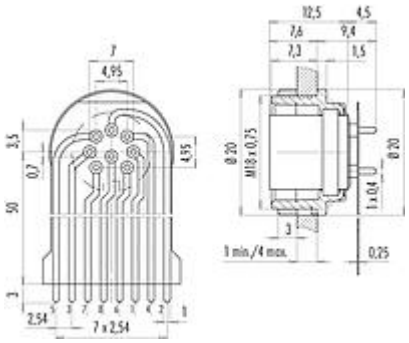

Scale drawing

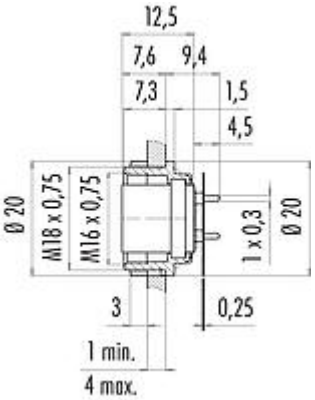

Contact arrangement (Plug-in side)

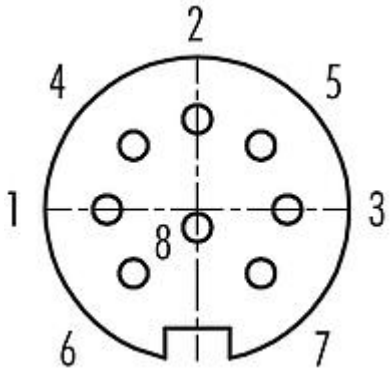

You can find the assembly instructions on the next page.

Technical data

General features

Part no.	**09 0474 65 08**
Connector design	Female panel mount connector
Version	female straight
Connector locking system	screw
Termination	THT
Degree of protection	IP40
Temperature range from/to	-40 °C / 85 °C

Product data sheet

Miniature connectors

Product description	**M16 IP40 Female panel mount connector, Contacts: 8 DIN, unshielded, THT, IP40, front mounting**
Area	**M16 IP40 series 680**
Part no.	**09 0474 65 08**

Tightening torque screw nut	0.5-1 Nm
Mechanical operation	> 500 Mating cycles
Weight (g)	10.94
Customs tariff number	85369010

Electrical parameters

Rated voltage	60 V
Rated impulse voltage	500 V
Rated current (40 °C)	5,0 A
Insulation resistance	≥ 10^{10} Ω
Pollution degree	1
Overvoltage category	I
Insulating material group	III
EMC compliance	unshielded

Material

Housing material	Zinc die-cast nickel-plated
Contact body material	PBT (UL94 V-0)
Contact material	CuSn (bronze)
Contact plating	Ag (silver)
REACH SVHC	CAS 7439-92-1 (Lead)
SCIP number	14962999-25f3-49e5-b886-b2ef078dbb02

Classifications

eCl@ss 11.1	27-44-01-09
ETIM 7.0	EC003569

Product description	**M16 IP40 Female panel mount connector, Contacts: 8 DIN, unshielded, THT, IP40, front mounting**
Area	**M16 IP40 series 680**
Part no.	**09 0474 65 08**

Assembly instructions / Panel cut-out

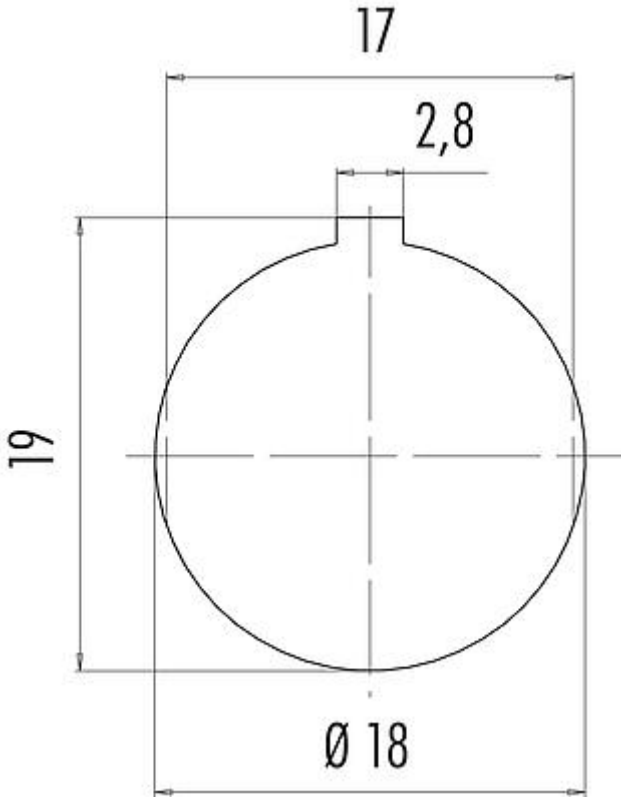

Product data sheet
Miniature connectors

Product description	**M16 IP40 Female panel mount connector, Contacts: 8 DIN, unshielded, THT, IP40, front mounting**
Area	**M16 IP40 series 680**
Part no.	**09 0474 65 08**

Security notices

The connectors have been developed for applications in plant engineering, control and electrical equipment construction. The user is responsible for checking whether the connectors can also be used in other areas of application.