Product data sheet

Automation technology - solenoid valve connectors

Product description	**Size A male power connector, contacts angled inwards, Contacts: 3+PE, unshielded, solder, IP40 without seal, UL, ESTI+, VDE**
Area	**Size A series 210**
Order number	**43 1719 021 04**

Illustration

Scale drawing

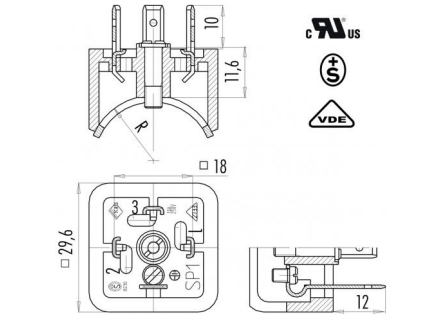

Technical data

General features

Order number	43 1719 021 04
Connector design	male power connector, contacts angled inwards
Version	connector male straight
Connector locking system	central bolt
Termination	solder
Degree of protection	IP40 without seal IP65 with seal, see accessories
Cross-sectional area	1.00 mm² / AWG 17
Temperature range from/to	-25 °C / 100 °C
Mechanical operation	> 50 Mating cycles
Weight (g)	11.105
Customs tariff number	85369010

Electrical parameters

Rated voltage	250 V
Rated impulse voltage	4000 V
Rated current (40 °C)	10 A
Insulation resistance	≥ 10^{10} Ω
Pollution degree	3
Overvoltage category	III
Insulating material group	III
EMC compliance	unshielded

Material

Contact body material	PA (UL94 HB)
Contact material	CuZn (brass)
Contact plating	Sn (tin)
REACH SVHC	CAS 7439-92-1 (Lead)

Authorization/approvals

Approval 1	UL
Approval 2	ESTI+
Approval 3	VDE

Classifications

eCl@ss 11.1	27-06-03-11
ETIM 7.0	EC001855

Product description	**Size A male power connector, contacts angled inwards, Contacts: 3+PE, unshielded, solder, IP40 without seal, UL, ESTI+, VDE**
Area	**Size A series 210**
Order number	**43 1719 021 04**

Security notices

The connector must not be plugged or unplugged under load. Non-observance and improper use can result in personal injury.
The connectors have been developed for applications in plant engineering, control and electrical equipment construction. The user is responsible for checking whether the connectors can also be used in other areas of application.
Connectors which are used in circuits with voltages dangerous to the touch may only be installed and used by, or under the supervision of, persons with electrical engineering training, taking into account the applicable regulations and standards.
Plug connectors with enclosure protection IP 67 and IP 68 are not suitable for use under water. When used outdoors, the plug connectors must be protected separately against corrosion. For further information on the IP protection classes, please refer to the "Technical Information" download centre.