Product data sheet

Miniature connectors

Product description	**M16 IP67 male panel mount connector, Contacts: 3 DIN, unshielded, solder, IP67, UL**
Area	**M16 IP67 series 723**
Order number	**09 0107 00 03**

Illustration

Scale drawing

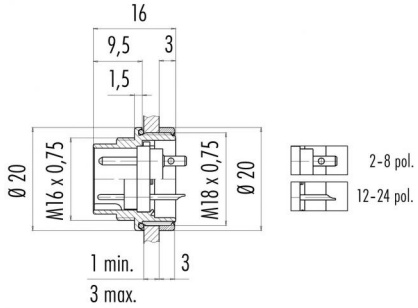

Contact arrangement (Plug-in side)

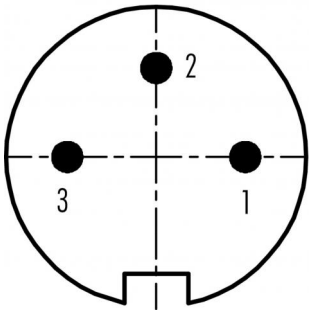

You can find the assembly instructions on the next page.

Technical data

General features

Order number	09 0107 00 03
Connector design	male panel mount connector
Version	connector male straight
Connector locking system	screw
Termination	solder
Degree of protection	IP67
Cross-sectional area	0.75 mm² / AWG 18
Temperature range from/to	-40 °C / 95 °C
Mechanical operation	> 500 Mating cycles
Weight (g)	10.473
Customs tariff number	85369010

Electrical parameters

Rated voltage	250 V
Rated impulse voltage	1500 V
Rated current (40 °C)	7 A
Insulation resistance	≥ 10^{10} Ω
Pollution degree	1
Overvoltage category	I
Insulating material group	III
EMC compliance	unshielded

Material

Housing material	Zinc die-cast nickel-plated
Contact body material	PBT (UL94 V-0)
Contact material	CuZn (brass)
Contact plating	Ag (silver)
REACH SVHC	CAS 7439-92-1 (Lead)

Authorization/approvals

Approval 1	UL

Product description	**M16 IP67 male panel mount connector, Contacts: 3 DIN, unshielded, solder, IP67, UL**
Area	**M16 IP67 series 723**
Order number	**09 0107 00 03**

Assembly instructions / Panel cut-out

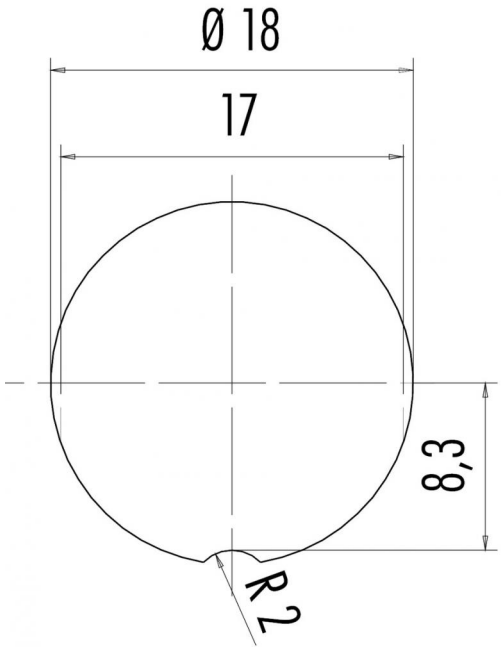

Product description	**M16 IP67 male panel mount connector, Contacts: 3 DIN, unshielded, solder, IP67, UL**
Area	**M16 IP67 series 723**
Order number	**09 0107 00 03**

Security notices

The connector must not be plugged or unplugged under load. Non-observance and improper use can result in personal injury.
The connectors have been developed for applications in plant engineering, control and electrical equipment construction. The user is responsible for checking whether the connectors can also be used in other areas of application.
Plug connectors with enclosure protection IP 67 and IP 68 are not suitable for use under water. When used outdoors, the plug connectors must be protected separately against corrosion. For further information on the IP protection classes, please refer to the "Technical Information" download centre.
The plug connector is not suitable for mains voltages Please observe the pollution degree and the overvoltage category. For further information, please refer to the download center "Technical Information".

DECLARATION FROM THE MANUFACTURER

For part no.: 09 0107 00 03 **29/11/2020**

With regard to the

Regulation (EC) No 1907/2006 of the European Parliament and of the Council of 18 December 2006 concerning the Registration, Evaluation, Authorisation and Restriction of Chemicals (REACH), establishing a European Chemicals Agency, amending Directive 1999/45/EC and repealing Council Regulation (EEC) No 793/93 and Commission Regulation (EC) No 1488/94 as well as Council Directive 76/769/EEC and Commission Directives 91/155/EEC, 93/67/EEC, 93/105/EC and 2000/21/EC.

With the REACH regulation, the EU has created a uniform system for the Registration, Evaluation, Authorisation and restriction of CHemicals – or REACH. The purpose of this regulation is to ensure a high level of protection of human health and the environment.

Franz Binder GmbH & Co. Elektrische Bauelemente KG hereby confirms that it acts as a downstream user (producer of products) according to the aforementioned regulation.

We obtain all raw materials and/or preparations, from which the connectors are made, from suppliers who have already registered or pre-registered all substances, including those present in the preparations. The products supplied by the company are not subject to registration.

With regard to Article 33(1) of the REACH regulation, Franz Binder GmbH & Co. Elektrische Bauelemente KG complies with its information obligations:

An up-to-date candidate list (candidate list of substances of very high concern for authorisation, as of 25/06/2020 see: https://echa.europa.eu/de/candidate-list-table) in accordance with Article 59 (1, 10) of the regulation (EC) No 1907/2006 (REACH) has been published.
The aforementioned article includes the following substances from the up-to-date candidate list in concentrations of more than 0,1 percent by mass:

- CAS 7439-92-1 (Lead)

Please refer any questions to our Product Compliance Team:

Product-Compliance@binder-connector.de

Franz Binder GmbH & Co.
Elektrische Bauelemente KG
Postfach 1152 • 74148 Neckarsulm
Rötelstraße 27 • 74172 Neckarsulm

Phone +49 7132 325-0
Fax +49 7132 325-150
info@binder-connector.de
www.binder-connector.de

DECLARATION FROM THE MANUFACTURER

For part no.: 09 0107 00 03 **29/11/2020**

With regard to the

COMMISSION DELEGATED DIRECTIVE (EU) 2015/863
of 31 March 2015
amending Annex II to Directive 2011/65/EU of the European Parliament and of the Council as regards the list of restricted substances

Directive 2011/65/EU stipulates provisions on the restriction of the use of hazardous substances in electrical and electronic equipment (EEE) with a view to contributing to the protection of human health and the environment, including the environmentally sound recovery and disposal of EEE waste.

ANNEX II
Restricted substances referred to in Article 4(1) and maximum concentration values tolerated by weight in homogeneous materials

Lead (0,1%) mercury (0,1%) cadmium (0,01%) hexavalent chromium (0,1%) polybrominated biphenyls (PBB) (0,1%) polybrominated diphenyl ethers (PBDE) (0,1%) bis(2-ethylhexyl) phthalate (DEHP) (0,1%) butyl benzyl phthalate (BBP) (0,1%) dibutyl phthalate (DBP) (0,1%) diisobutyl phthalate (DIBP) (0,1%)

Franz Binder GmbH & Co. Elektrische Bauelemente KG hereby confirms that it complies with all standard articles of the aforementioned Directive. Our products do not contain any of the specified prohibited substances above the maximum permitted concentrations specified therein, taking into account the exceptions in Annex III of Directive 2011/65/EU.

- Complies with RoHS III with exception 6c

Please refer any questions to our Product Compliance Team:

Product-Compliance@binder-connector.de

Franz Binder GmbH & Co.
Elektrische Bauelemente KG
Postfach 1152 • 74148 Neckarsulm
Rötelstraße 27 • 74172 Neckarsulm

Phone +49 7132 325-0
Fax +49 7132 325-150
info@binder-connector.de
www.binder-connector.de

MANUFACTURER'S DECLARATION

For part no.: 09 0107 00 03 **29/11/2020**

with regard to

Declaration of compliance with China RoHS – Components

We herewith declare the compliance of this product with the Chinese marking requirements.
This product can be recycled and used safely during its environmentally friendly use period of 50 years.
These articles will be sold as components only for manufacturing. According to the Electronic Industry Standard SJ/T 11364-2014 it needs not to be marked with Environmentally Friendly Use Period (EFUP) label.
This product should be recycled after its environmental protection use period has expired because it may contain substances or elements as shown in the following table:

	Hazardous Substance					
Part Name	Lead (Pb)	Mercury (Hg)	Cadmium (Cd)	Hexavalent Chromium (Cr(VI))	Polybrominated biphenyls (PBB)	Polybrominated diphenyl ethers (PBDE)
Connectors	X	O	O	O	O	O

This table is prepared in accordance with the provisions of SJ/T 11364.

O: Indicates that said hazardous substance contained in all of the homogeneous materials for this part is below the limit requirement of GB/T 26572

X: Indicates that said hazardous substance contained in at least one of the homogeneous materials used for this part is above the limit requirement of GB/T 26572

The table shows where these substances may be found in this Electrical and Electronic Product.

Please refer any questions to our Product Compliance Team:

Product-Compliance@binder-connector.de

Franz Binder GmbH & Co.
Elektrische Bauelemente KG
Postfach 1152 • 74148 Neckarsulm
Rötelstraße 27 • 74172 Neckarsulm

Phone +49 7132 325-0
Fax +49 7132 325-150
info@binder-connector.de
www.binder-connector.de