Product data sheet
Characteristics

RPF2BJD
power relay plug-in - Zelio RPF - 2 CO - 12 V DC - 30 A

Main

Range of product	Zelio Relay
Series name	Power
Product or component type	Plug-in relay
Device short name	RPF
Contacts type and composition	2 C/O
[Uc] control circuit voltage	12 V DC
Control type	Without lockable test button
Shape of pin	Flat
Contacts material	Silver tin oxide
[Ithe] conventional enclosed thermal current	25 A at -40…55 °C relays side by side without a gap 30 A at -40…55 °C 13 mm gap between two relays
Resistive rated load	25 A at 28 V DC 30 A at 250 V AC
Utilisation coefficient	10 %

Complementary

Mounting support	DIN rail Panel
Control circuit voltage limits	9.6...13.2 V
[Ie] rated operational current	30 A at 277 V (AC) NO conforming to UL 20 A at 28 V (DC) NO conforming to UL 30 A at 250 V (AC) NO conforming to IEC 25 A at 28 V (DC) NO conforming to IEC 3 A at 277 V (AC) NC conforming to UL 3 A at 28 V (DC) NC conforming to UL 3 A at 250 V (AC) NC conforming to IEC 3 A at 28 V (DC) NC conforming to IEC
[Ui] rated insulation voltage	250 V conforming to IEC 300 V conforming to UL
[Uimp] rated impulse withstand voltage	4 kV during 1.2/50 µs

Disclaimer: This documentation is not intended as a substitute for and is not to be used for determining suitability or reliability of these products for specific user applications

Maximum switching voltage	250 V conforming to IEC
Maximum switching capacity	7500 VA/700 W
Minimum recommended switching capacity	6000 mW 500 mA / 12 V for NO 170 mW 10 mA / 6 V for NC
Operating rate	<= 1200 cycles/hour under load <= 18000 cycles/hour no-load
Mechanical durability	5000000 cycles
Electrical durability	100000 cycles for resistive load
Average coil consumption	1.7 W
Drop-out voltage threshold	>= 0.1 Uc
Operate time	25 ms
Release time	25 ms
Average resistance	86 Ohm at 20 °C +/- 10 %
Safety reliability data	B10d = 100000
Protection category	RT II
Test levels	Level A group mounting
Operating position	Any position
CAD overall width	33.7 mm
CAD overall height	68.5 mm
CAD overall depth	39.2 mm
Net weight	0.082 kg
Device presentation	Complete product

Environment

Dielectric strength	2000 V AC between poles with basic 4000 V AC between coil and contact with reinforced 1500 V AC between contacts with micro disconnection
Standards	UL 508 CSA C22.2 No 14 EN/IEC 61810-1
Product certifications	CE CSA GOST UL
Ambient air temperature for storage	-40…85 °C
Ambient air temperature for operation	-40…55 °C
Vibration resistance	3 gn, amplitude = +/- 1 mm (f = 10…150 Hz)5 cycles in operation 10 gn, amplitude = +/- 1 mm (f = 10…150 Hz)5 cycles not operating
IP degree of protection	IP40 conforming to EN/IEC 60529
Shock resistance	10 gn for in operation 30 gn for not operating
Pollution degree	3

Packing Units

Package 1 Weight	0.094 kg
Package 1 Height	0.420 dm
Package 1 width	0.350 dm
Package 1 Length	0.690 dm

Offer Sustainability

Sustainable offer status	Green Premium product
REACh free of SVHC	Yes
EU RoHS Directive	Pro-active compliance (Product out of EU RoHS legal scope) EU RoHS Declaration
Toxic heavy metal free	Yes

Mercury free	Yes
RoHS exemption information	Yes
China RoHS Regulation	China RoHS declaration
Environmental Disclosure	Product Environmental Profile
WEEE	The product must be disposed on European Union markets following specific waste collection and never end up in rubbish bins

Contractual warranty

Warranty	18 months

RPF2BJD

Dimensions

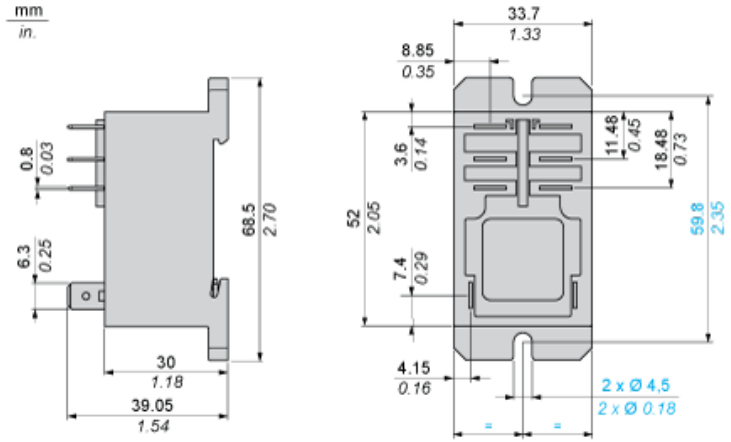

Wiring Diagram

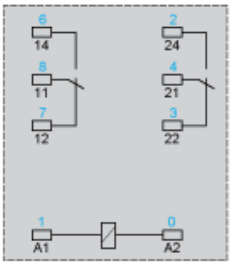

Symbols shown in blue correspond to Nema marking.

Electrical Durability of Contacts

AC Resistive load

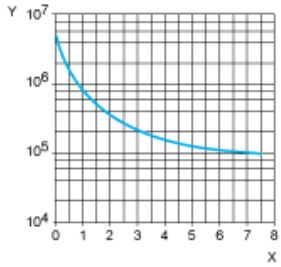

X Switching capacity (kVA)
Y Durability (number of operating cycles)

AC Reduction coefficient for inductive load (depending on power factor cos ϕ)

Durability (inductive load) = durability (resistive load) x reduction coefficient.

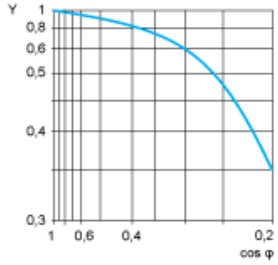

Y reduction coefficient

Maximum switching capacity on DC resistive load

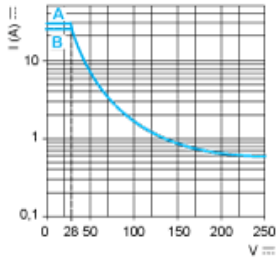

A 30 A
B 25 A

Note : These are typical curves, actual durability depends on load, environment, duty cycle, etc.